DIMENSIONS AND WEIGHT

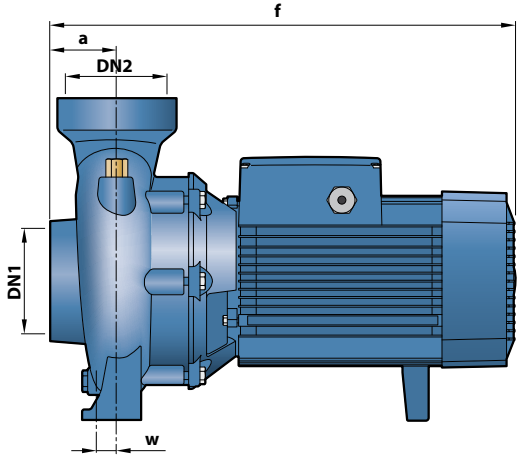

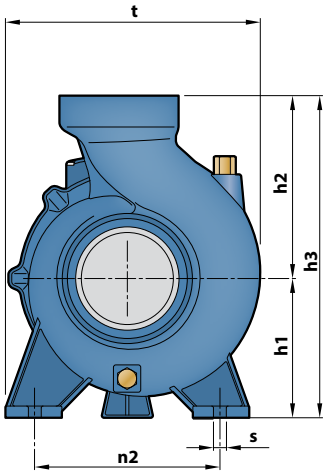

MODEL		PORTS		DIMENSIONS mm									kg	
Single-phase	**Three-phase**	**DN1**	**DN2**	a	f	h1	h2	h3	t	n2	w	s	1~	3~
HFm 4	**HF 4**	**2½"**	**2½"**	47	317	97	143	240	198	155	-63	10	**14.3**	**14.3**
HFm 6B	**HF 6B**	**3"**	**3"**	68	411	120	193	312	240	190	5	12.5	**26.8**	**26.8**
–	**HF 6A**				429								**–**	**29.3**
–	**HF 8B**	**4"**	**4"**	71	445	132	180		245		27	14	**–**	**35.6**
–	**HF 20A**				470				255				**–**	**41.0**
–	**HF 30B**			76,5	534	160	210	370	292	212			**–**	**52.2**
–	**HF 30A**												**–**	**57.8**